Herbie Automation Guide

Presented by Gail Love

At Herbie's 50 Year Anniversary

Orlando, Florida

March 15-17, 2019

Everyone should have at least a 12 channel remote in their car. Made up of a transmitter (push buttons) and a receiver (middle), you can buy these cheaply off the internet. I've always had a good history with Lightobject.com for around $30. You can use as many as you might need (I have installed 32 channels on the same vehicle) and have multiple remotes to operate the same receiver if you choose.

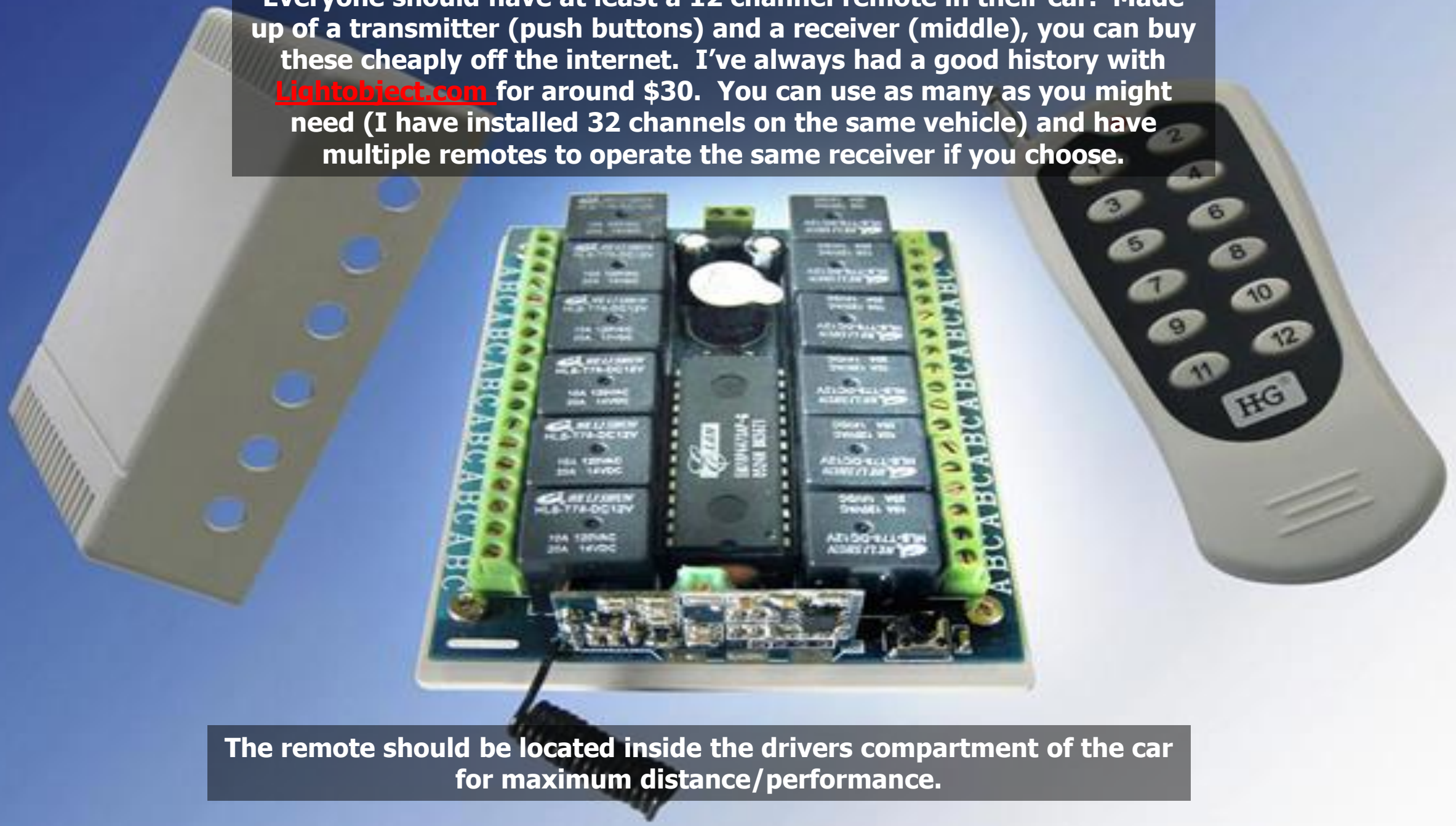

The remote should be located inside the drivers compartment of the car for maximum distance/performance.

The 12Ch RF Wireless Remote Control Receiver uses 12 - 5amp DC relays to control whatever function you choose.

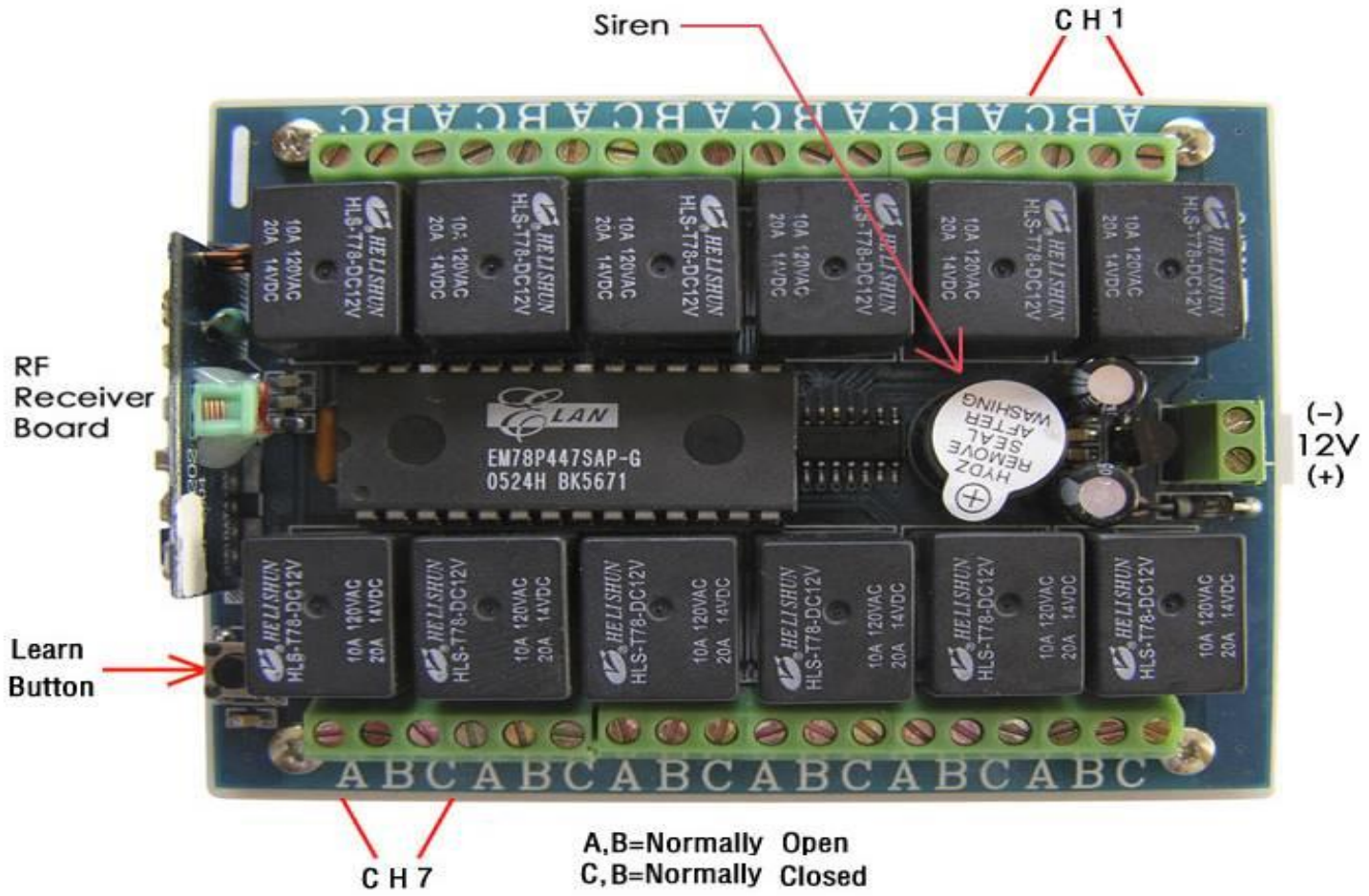

Typical wiring for the 12Ch RF Wireless Remote Control Receiver.

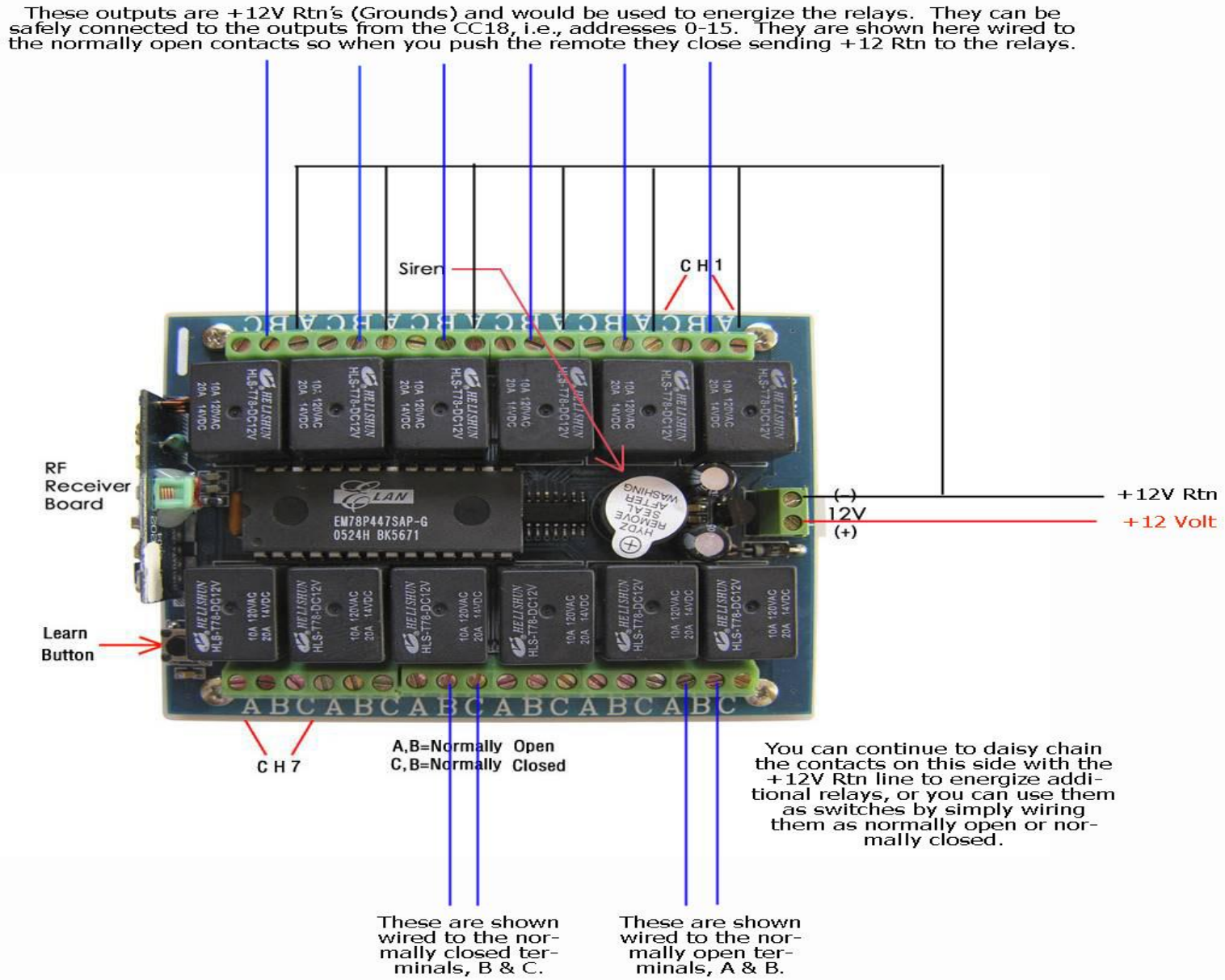

Because the 12Ch RF Wireless Remote Control Receiver only uses 5 amp relays, I recommend using their output to energize commercial 30/40 amp relays as shown and can be purchased for around $1.00 each off E-Bay.

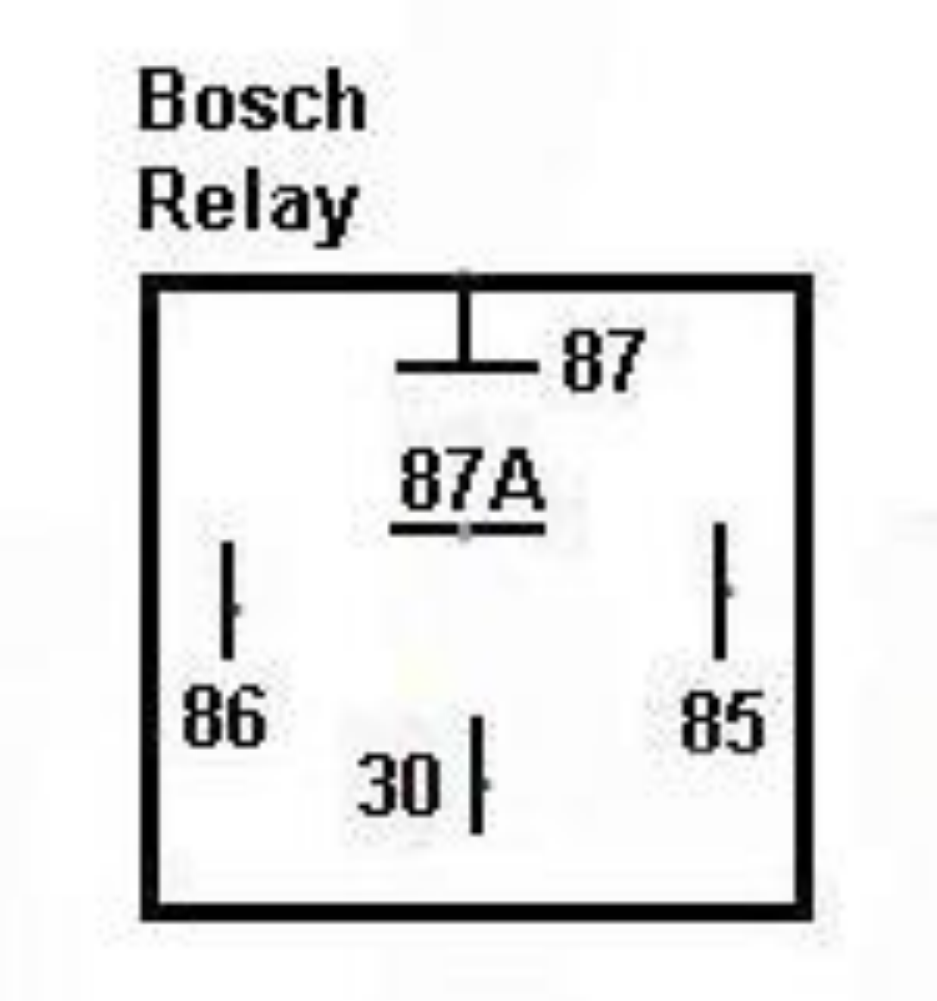

The SPLAT CC-18 Programmable Logic Controller (PLC) can be used to automatically control your car. Price, around $65 with programming cable from splatco.com.

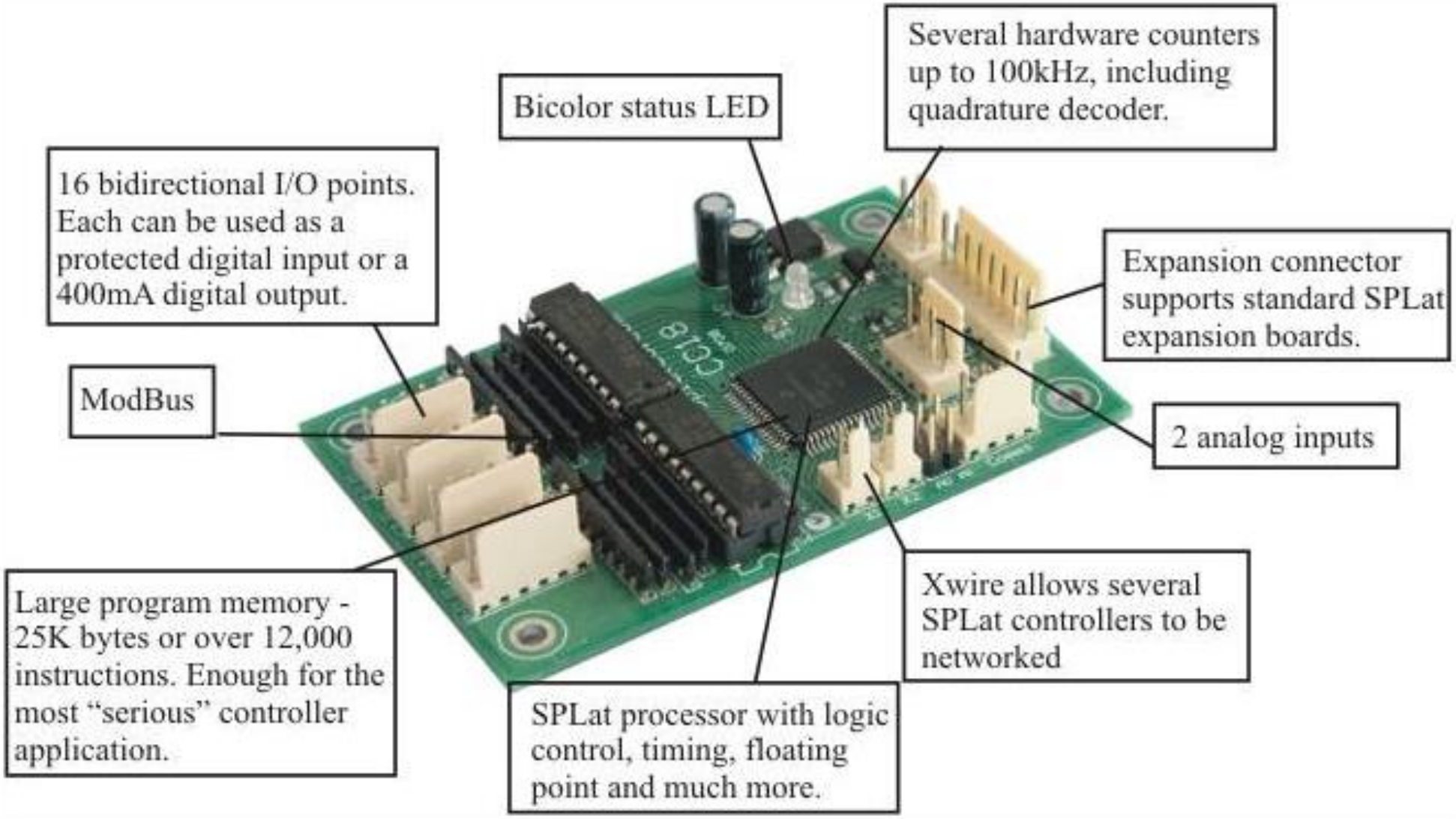

Typical input/output wiring for the SPLAT CC-18 Programmable Logic Controller (PLC).

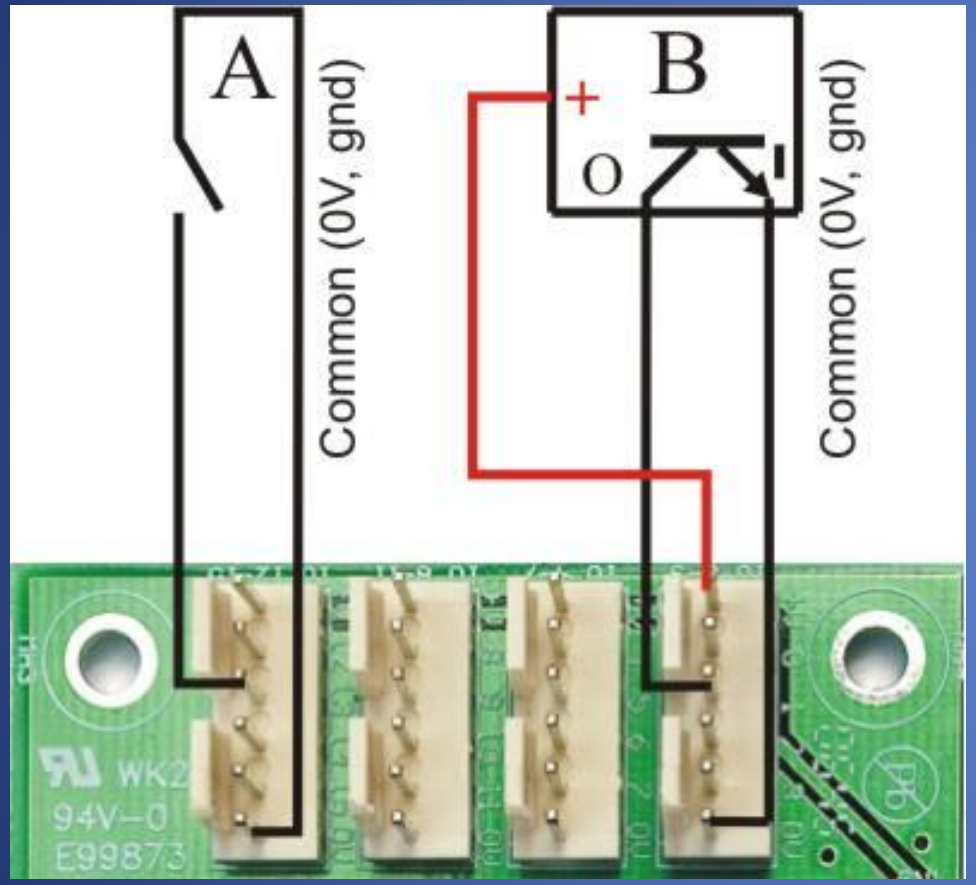

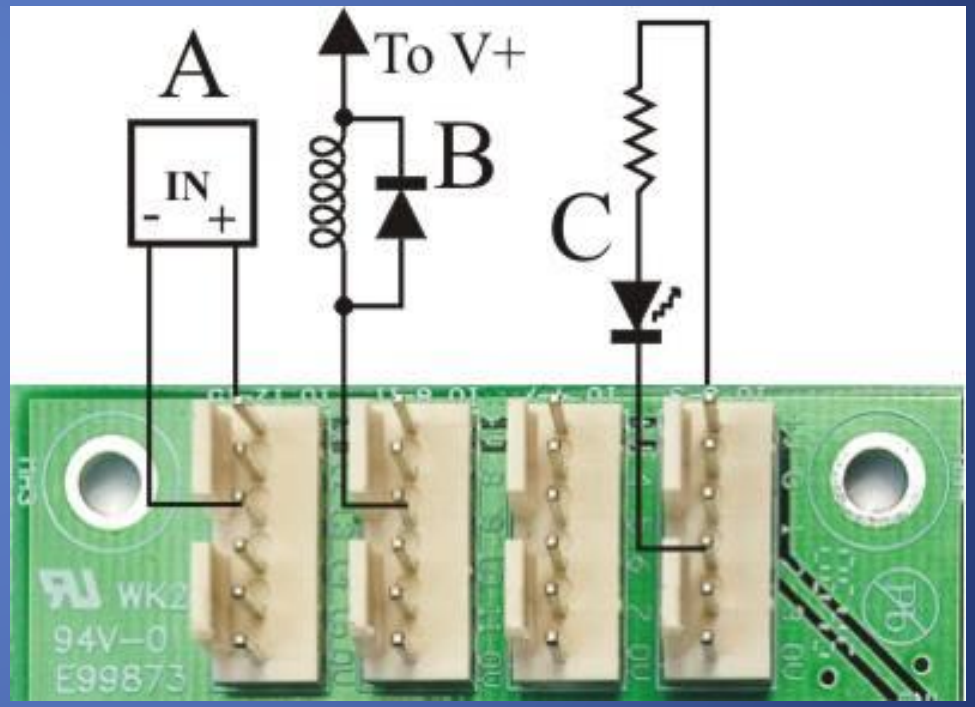

Pin locations and I/O identification for the SPLAT CC-18 Programmable Logic Controller (PLC).

For convenience, I have identified the I/O pins as shown for the schematic. Notice the power input has 2 ground pins on either side of the 12V power input pin.

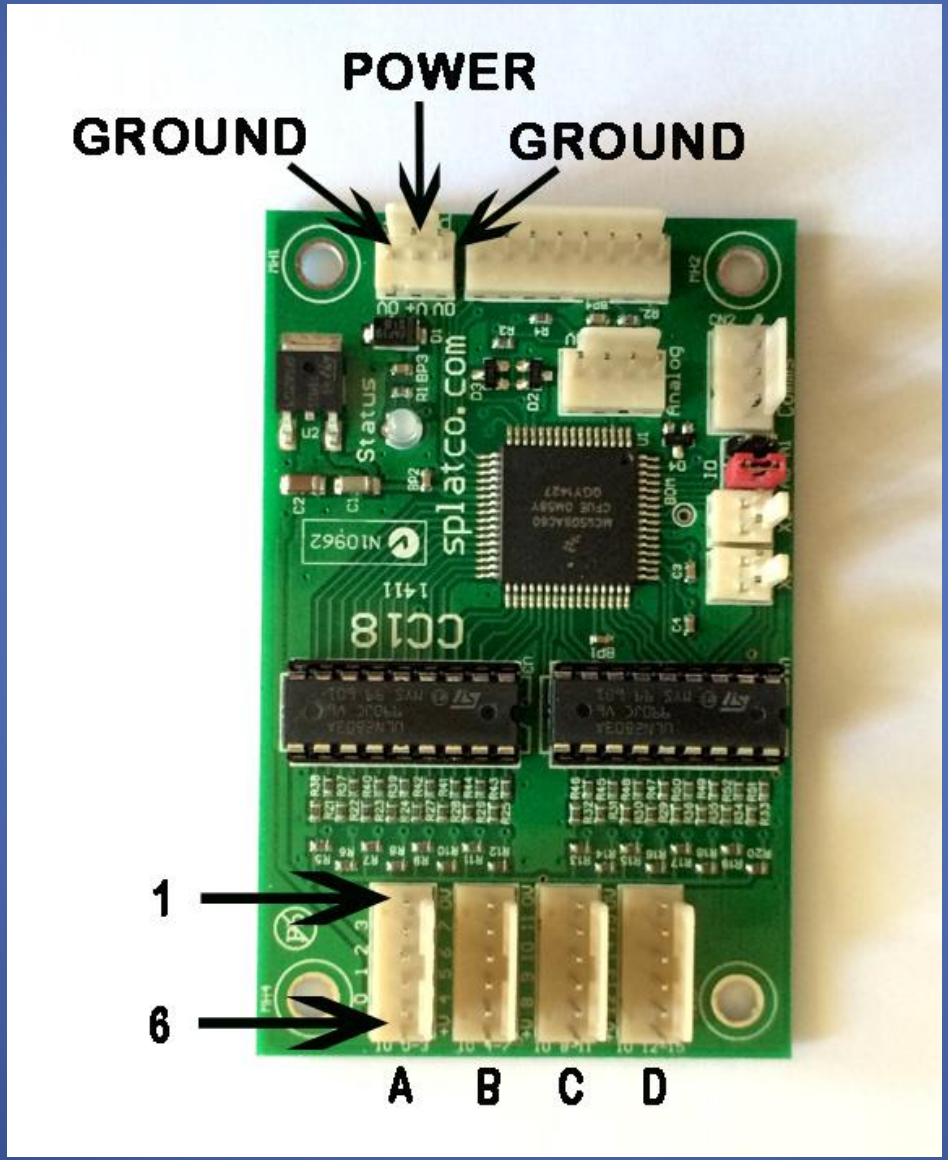

Here is the CC-18 mounted in a small enclosure with 12 - 30/40 amp relays. The CC-18 as well as the remote control can be used to energize the relays as needed/programmed. Terminal blocks with screws are used on both ends for easy connection to the car/remote.

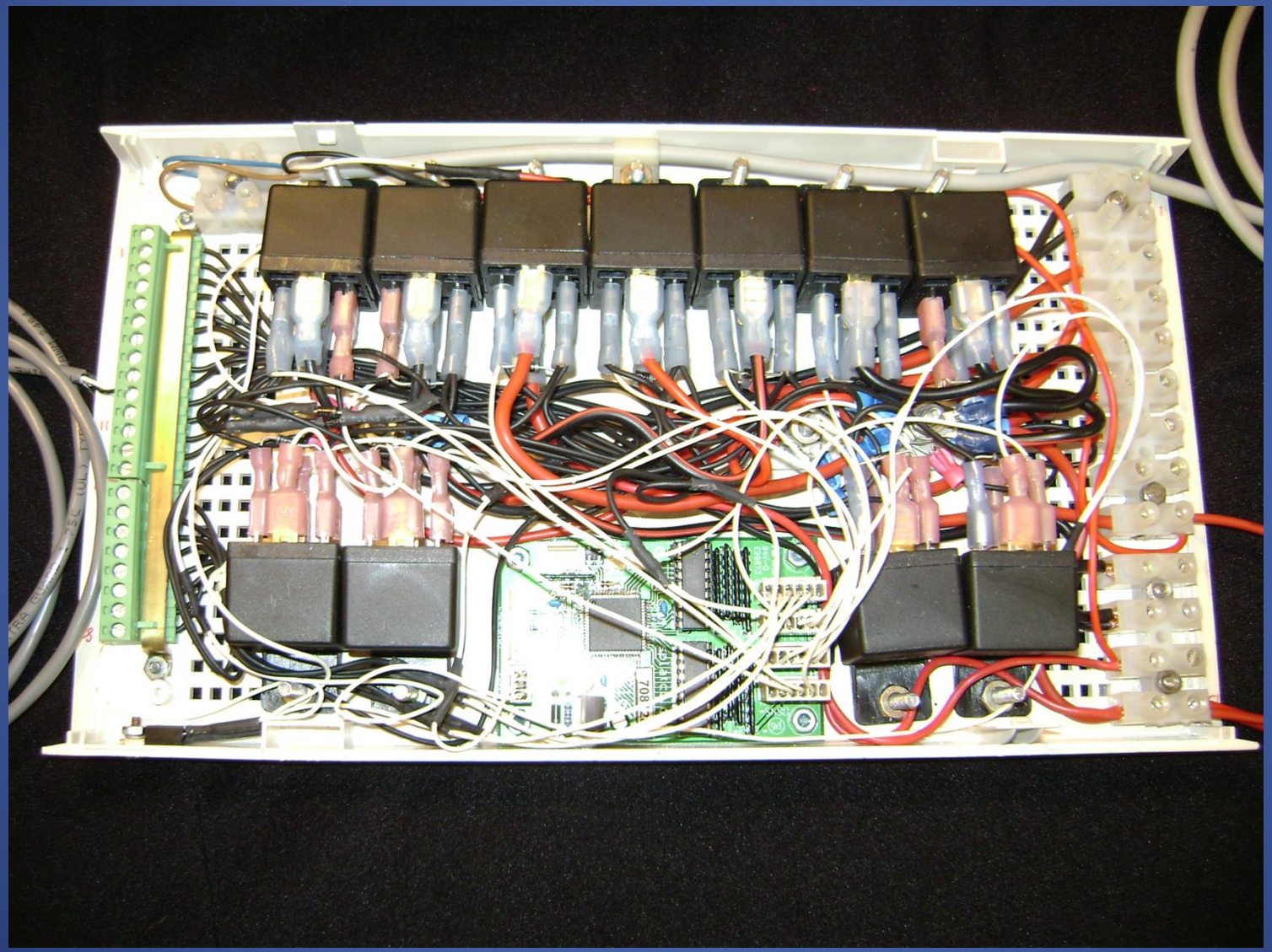

A drawing showing how the components inside were identified to match with a schematic allowing for easy hook-up/connection.

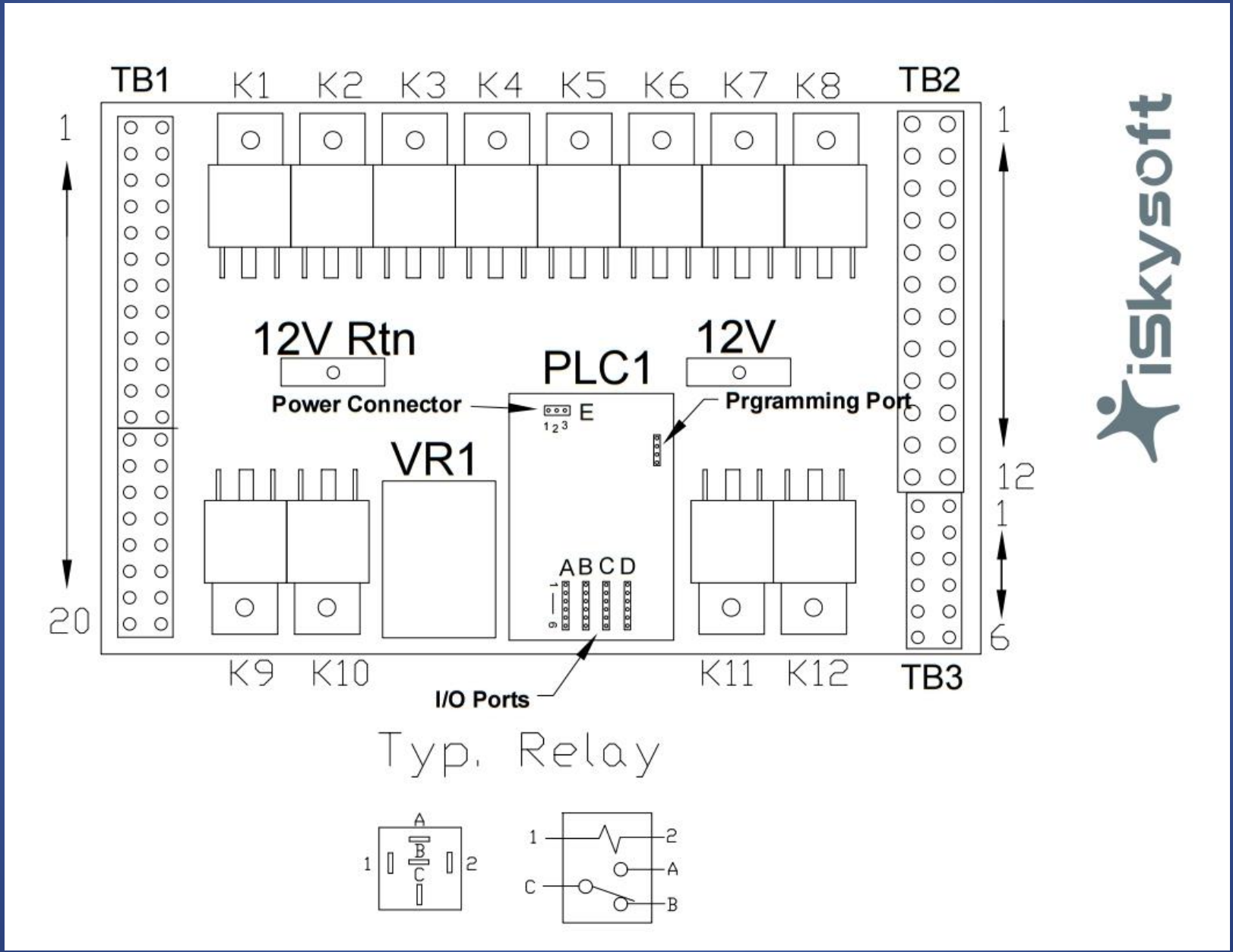

Each output of the remote control receiver is then used to energize the 30/40 amp relay. Notice that the output pins of the remote are ground in this example. I like running grounds instead of positive 12 volts whenever possible.

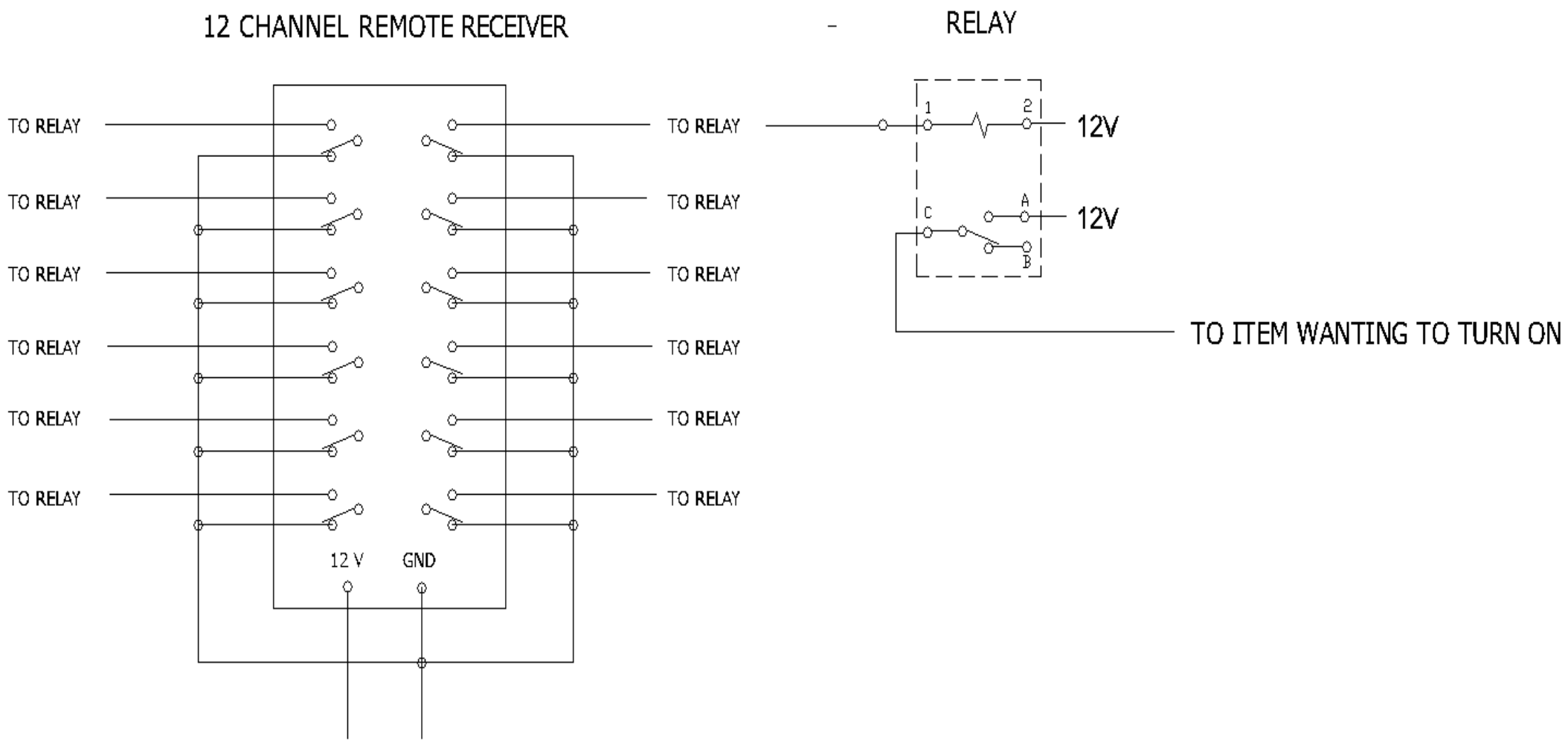

A copy of a typical schematic that can control 12 different outputs either by the remote or with a programmed CC-18. Notice that a DC step down inverter is used with the eye motors to keep the servo motors from burning up with too much voltage.

Notice the diode placement on each 30/40 amp relay coil. These must be used so as not to blow the output channels of the CC-18.

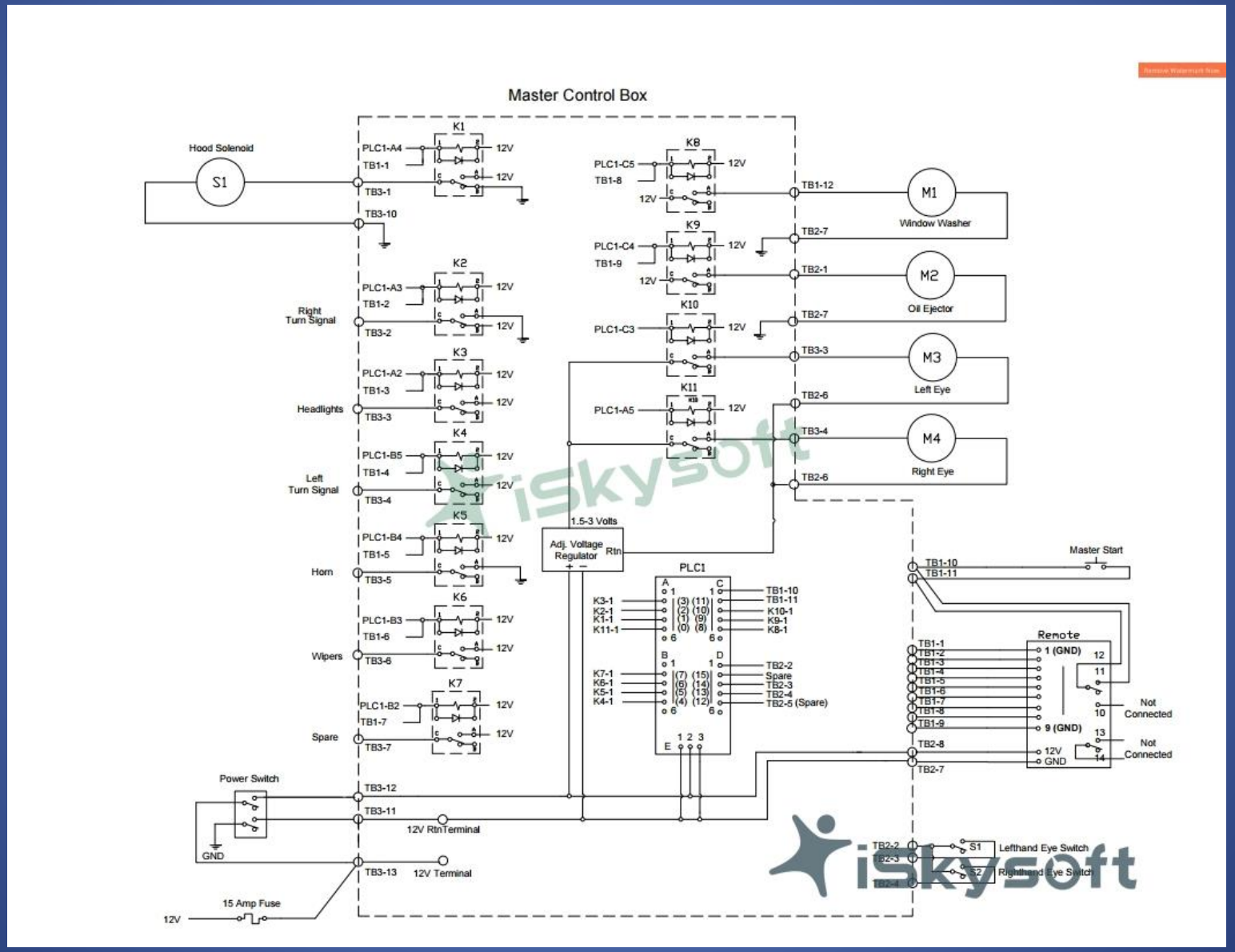

Here is a pair of modified servo motors driven by the 30/40 amp relays. Notice the placement and direction of the diodes.

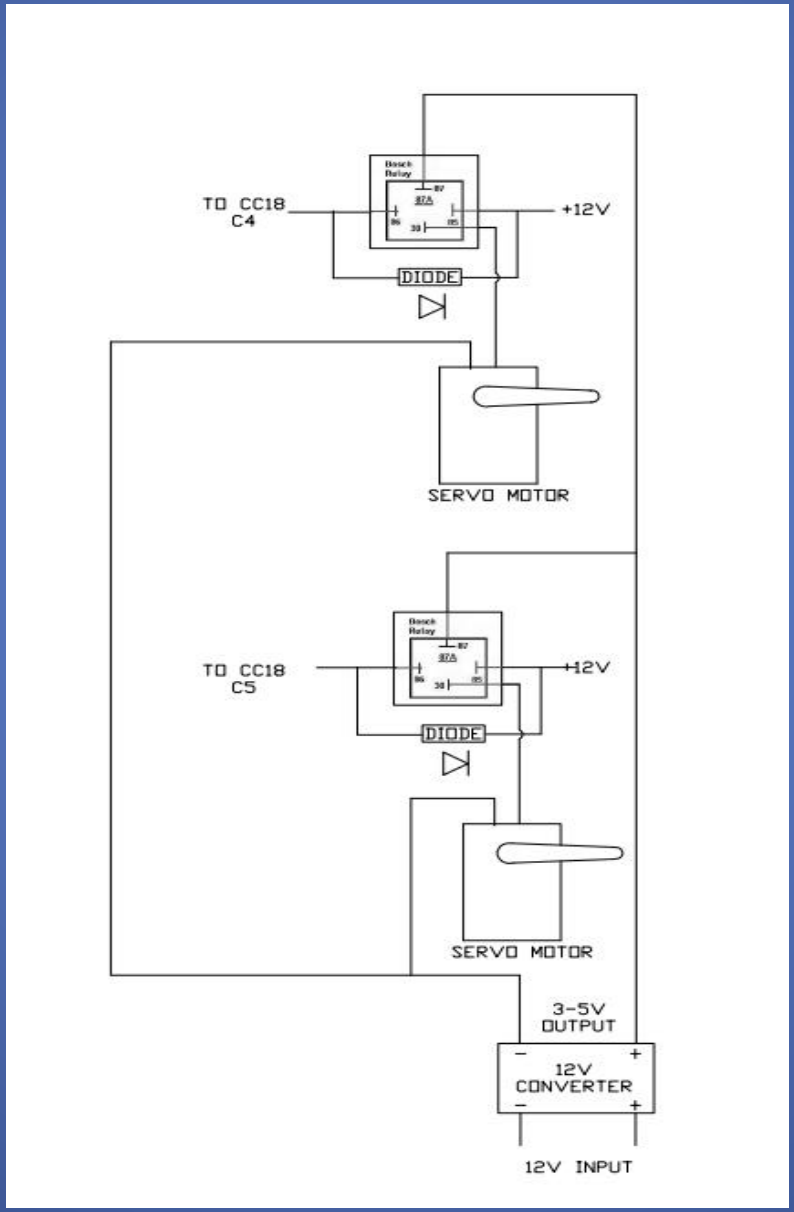

Another example of the proper diode use. In this case, the remote control or the PLC is controlling the Hood Solenoid.

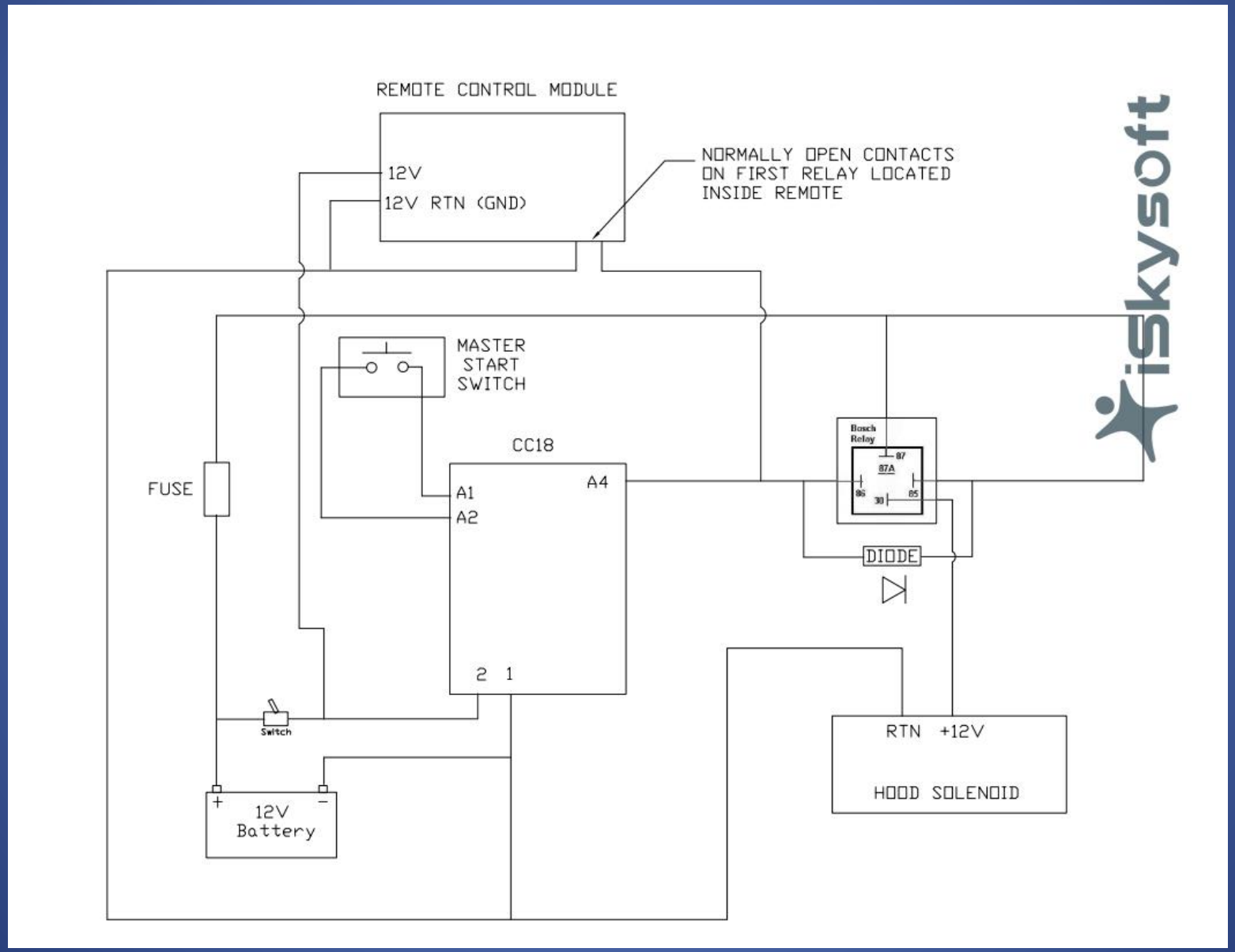

Here is a picture of the breadboard used by Justin Dueck who knew nothing about electronic circuits when he started. He simply laid everything out on a board and started hooking them up.

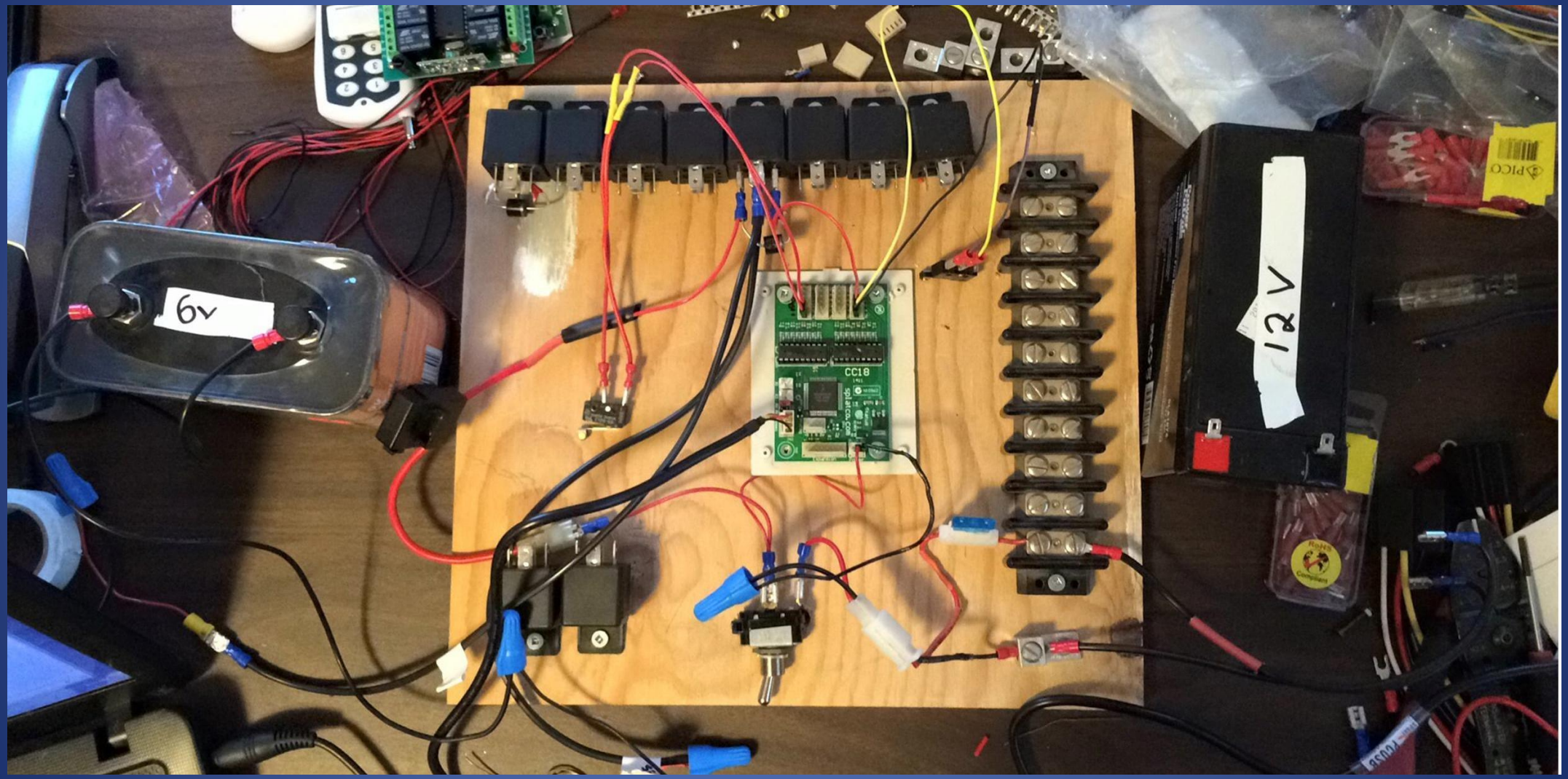

Justin was starting from scratch learning how to wire up an electronic assembly and simply took it step-by-step, never giving up and carefully tracing out each connection.

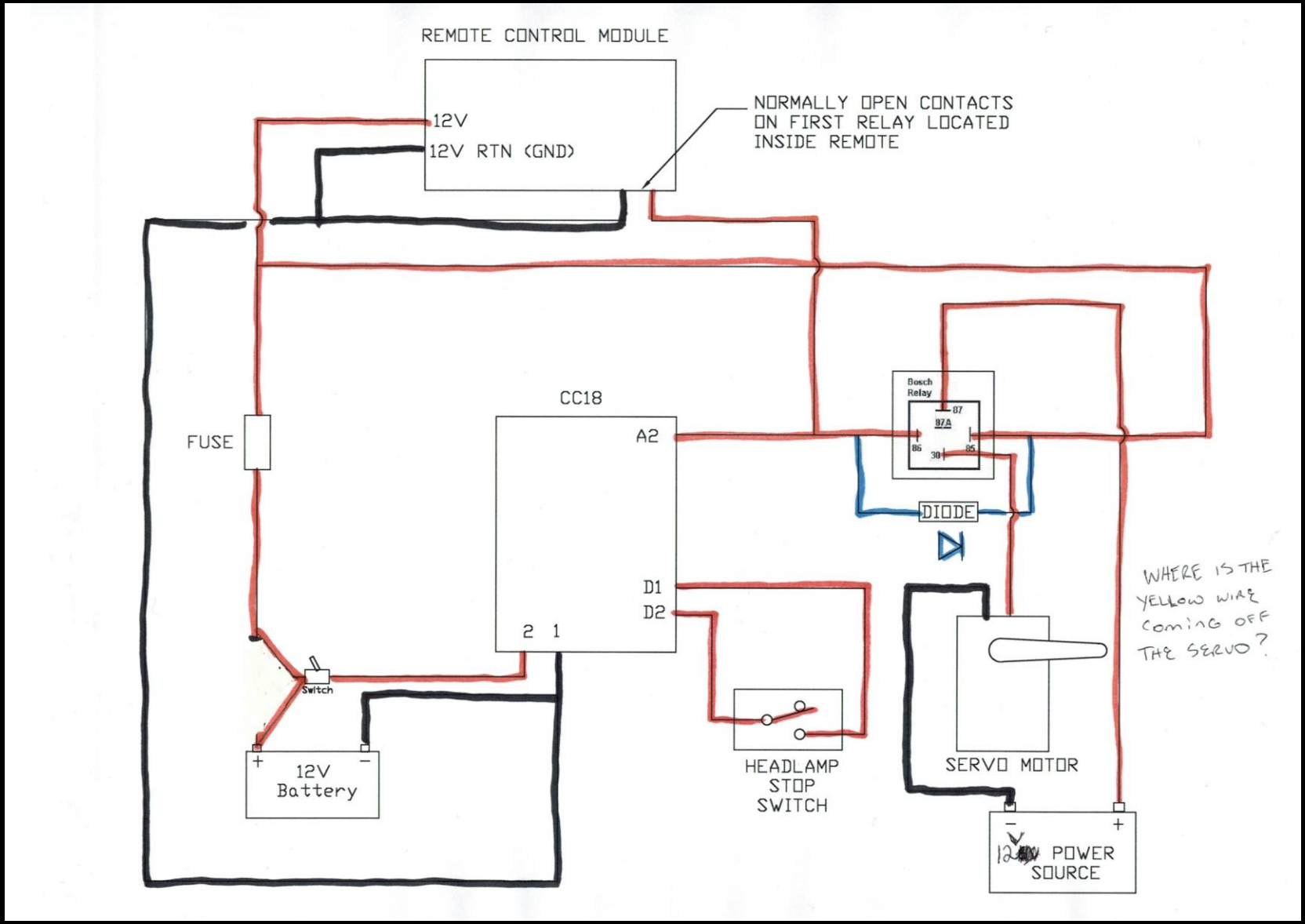

Getting closer with the integration of headlight assemblies and remote.

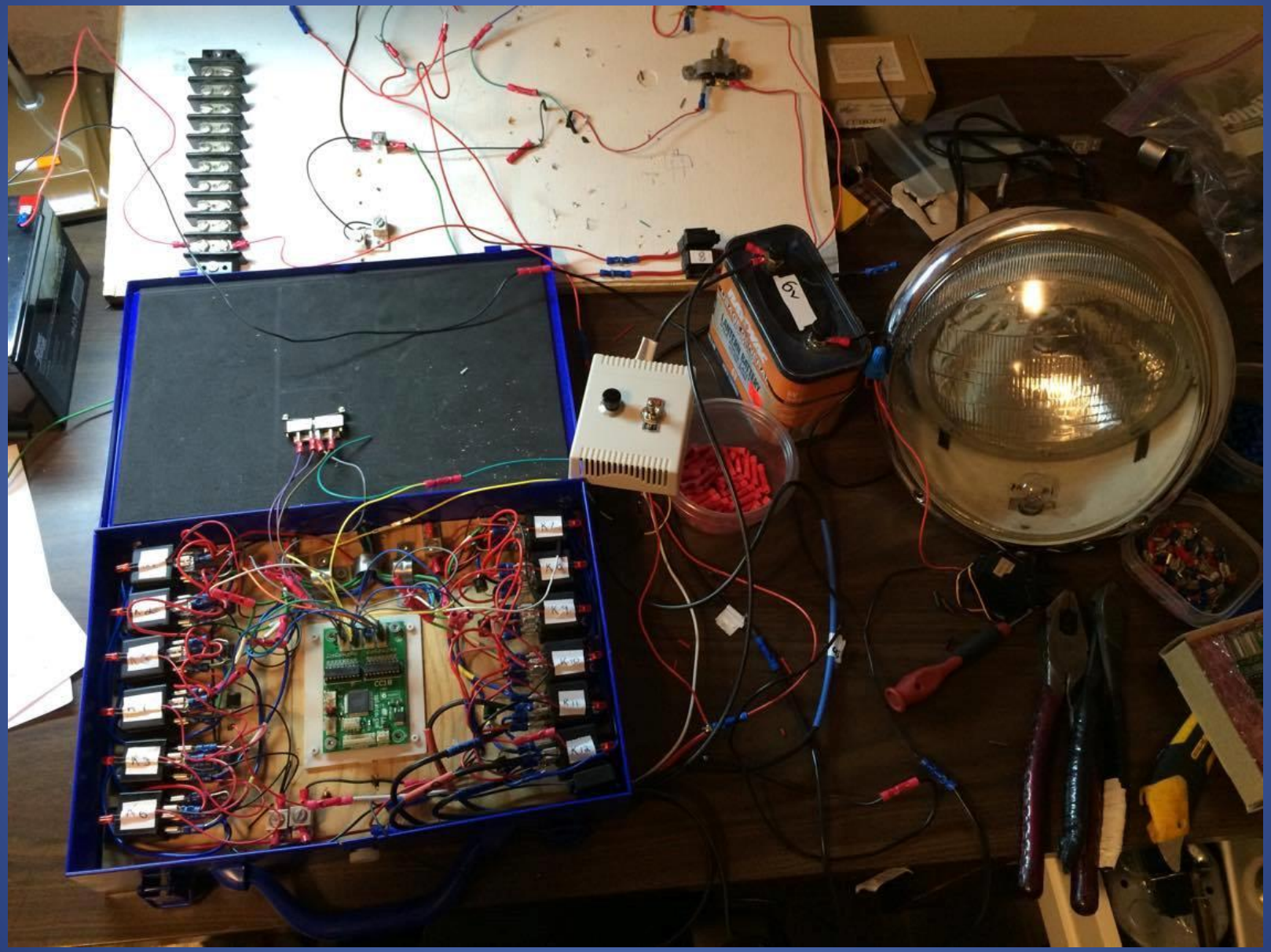

The finished product in a box Justin found to hold the relays and CC-18.

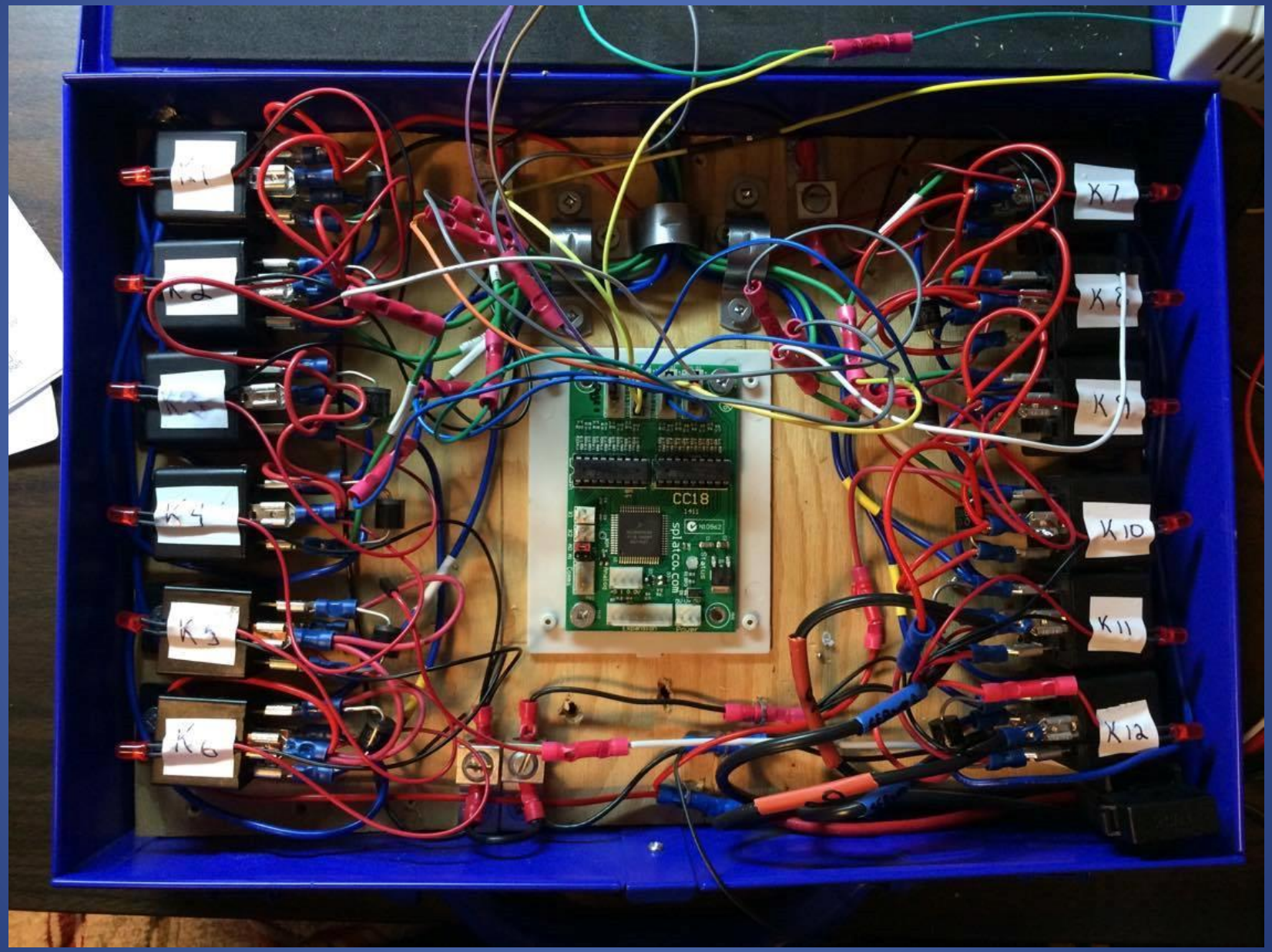

Everyone loves it when Herbie's headlamps (eye's) actually move from left to right. The headlamp assembly must be modified to allow for the movement plus a bracket to hold the motor/limit switch. The headlamp is connected top and bottom to allow it to move.

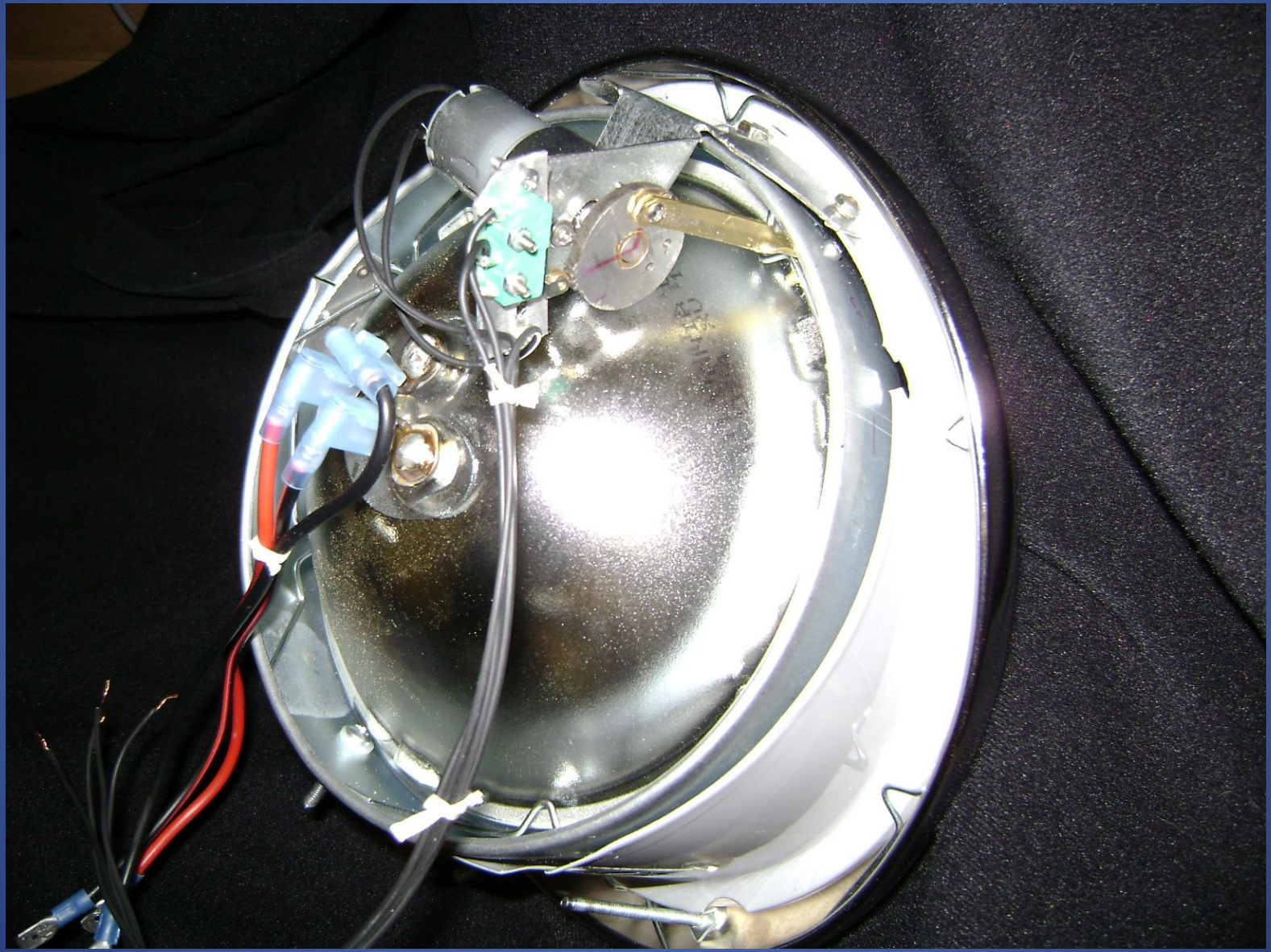

The last picture showed a typical DC gear motor being used. These are usually more expensive and I have found it just as easy to take a 6 Volt high torque servo motor and modify it so that it will run continuously in one direction. You can find how to do this on YouTube. The limit switch is used to stop the headlamp in the right position for driving.

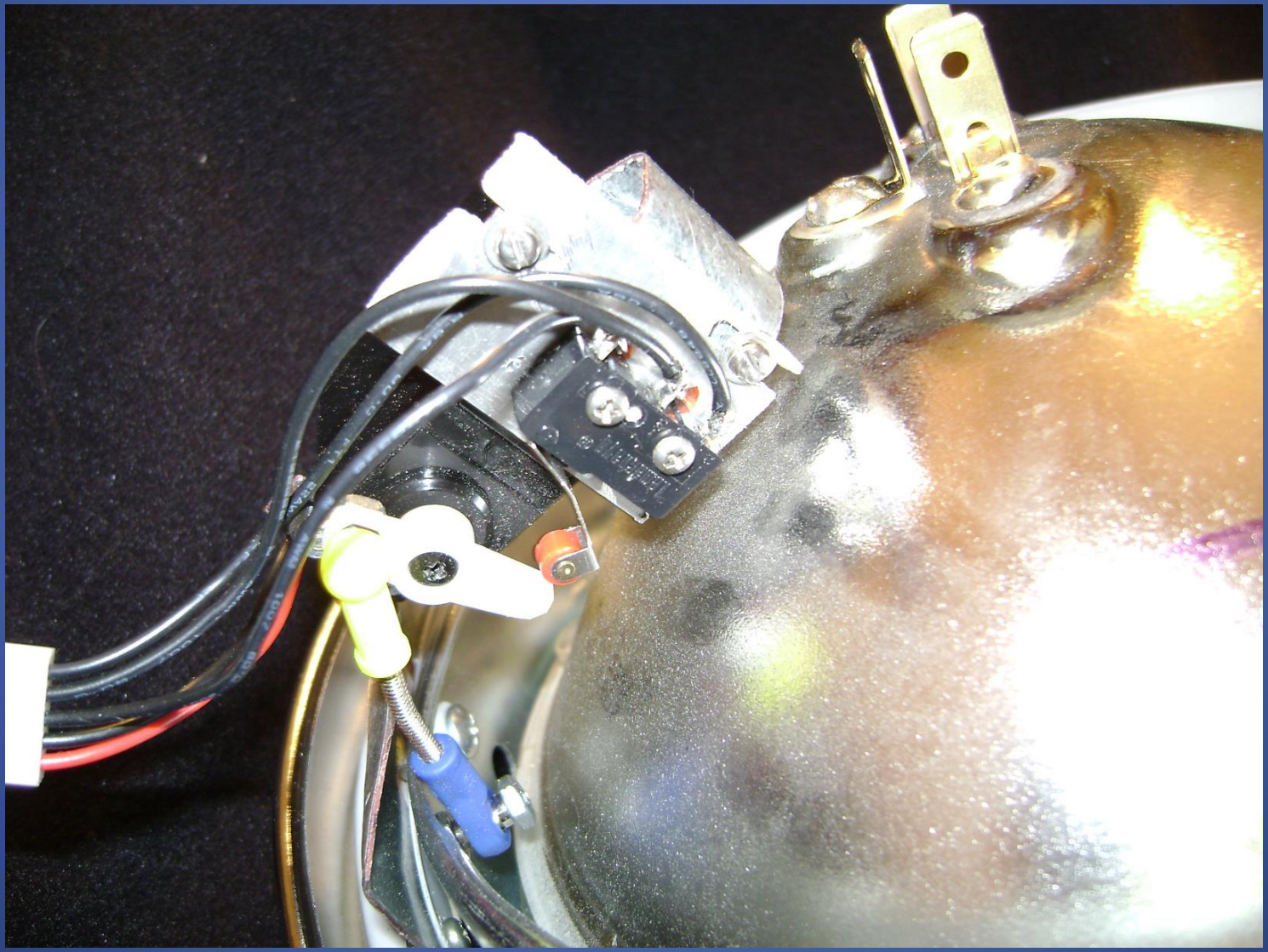

The neutral stop limit switch should be mounted so that it can be adjusted to aim the headlamps properly.

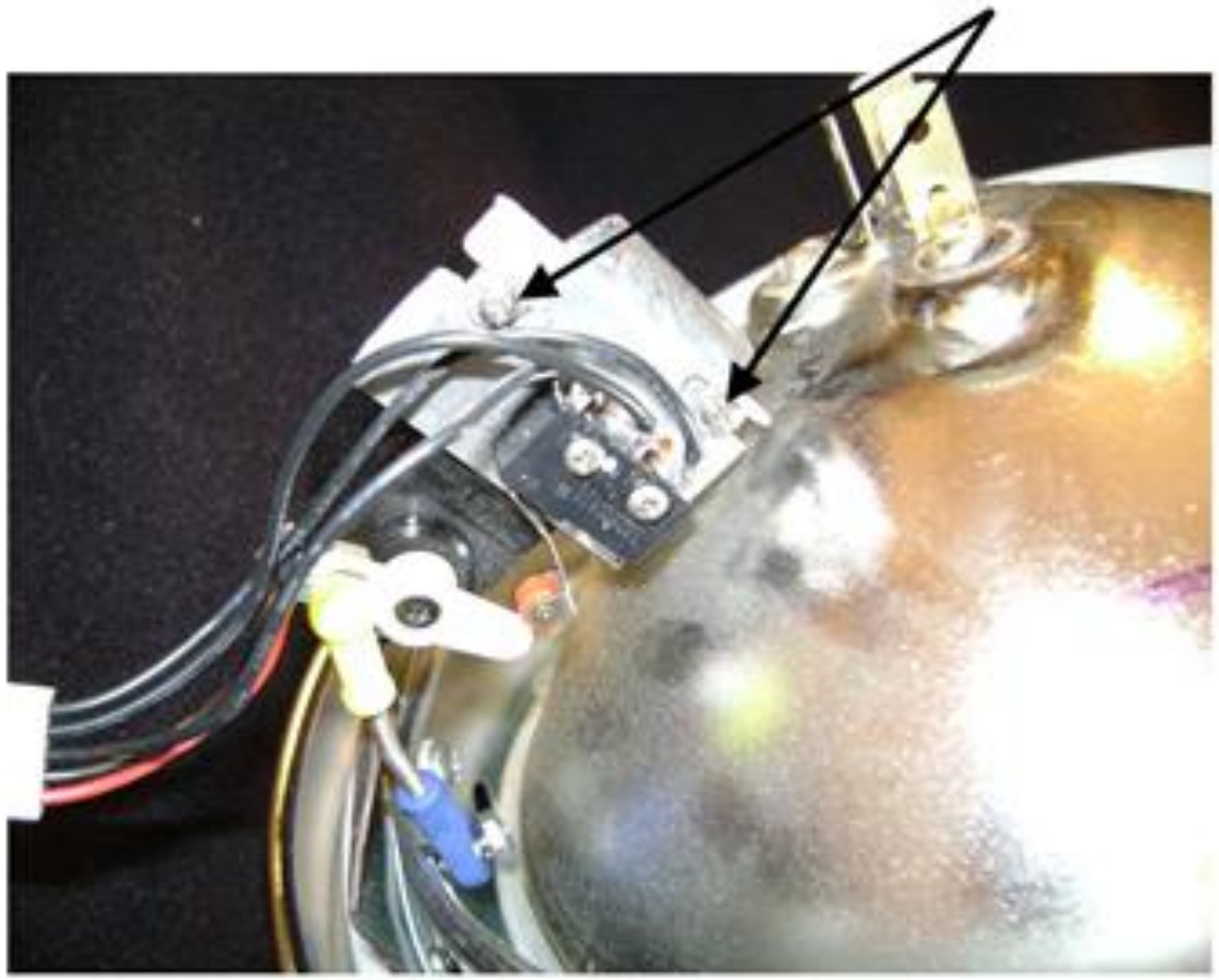

Figure 1.0

The bottom of the headlamp assembly showing the bottom pivot bolt in a slot that allows you to adjust/aim the headlamp for driving.

A typical installation of a washer bottle and linear actuator controlled by the remote/CC-18. The actuator (one on each side) has a 4 inch stroke and is made by Firgelli Automations.

Notice how a stud was added to the top of the actuator and simply fits into a L-bracket that is connected to the front hood/hinge bolt. A pin is then used to secure it to the hood so that it does not fly up if accidently opened while driving. Make sure the pics can be pulled from inside the car in the case of an electrical problem.

The actuators can also be replaced with pneumatic linear actuators as well which require an air source such as a scuba tank or air compressor, regulator, solenoid, etc.. The advantage of compressed air is that the hood opens almost instantaneously, i.e. it is much quicker.

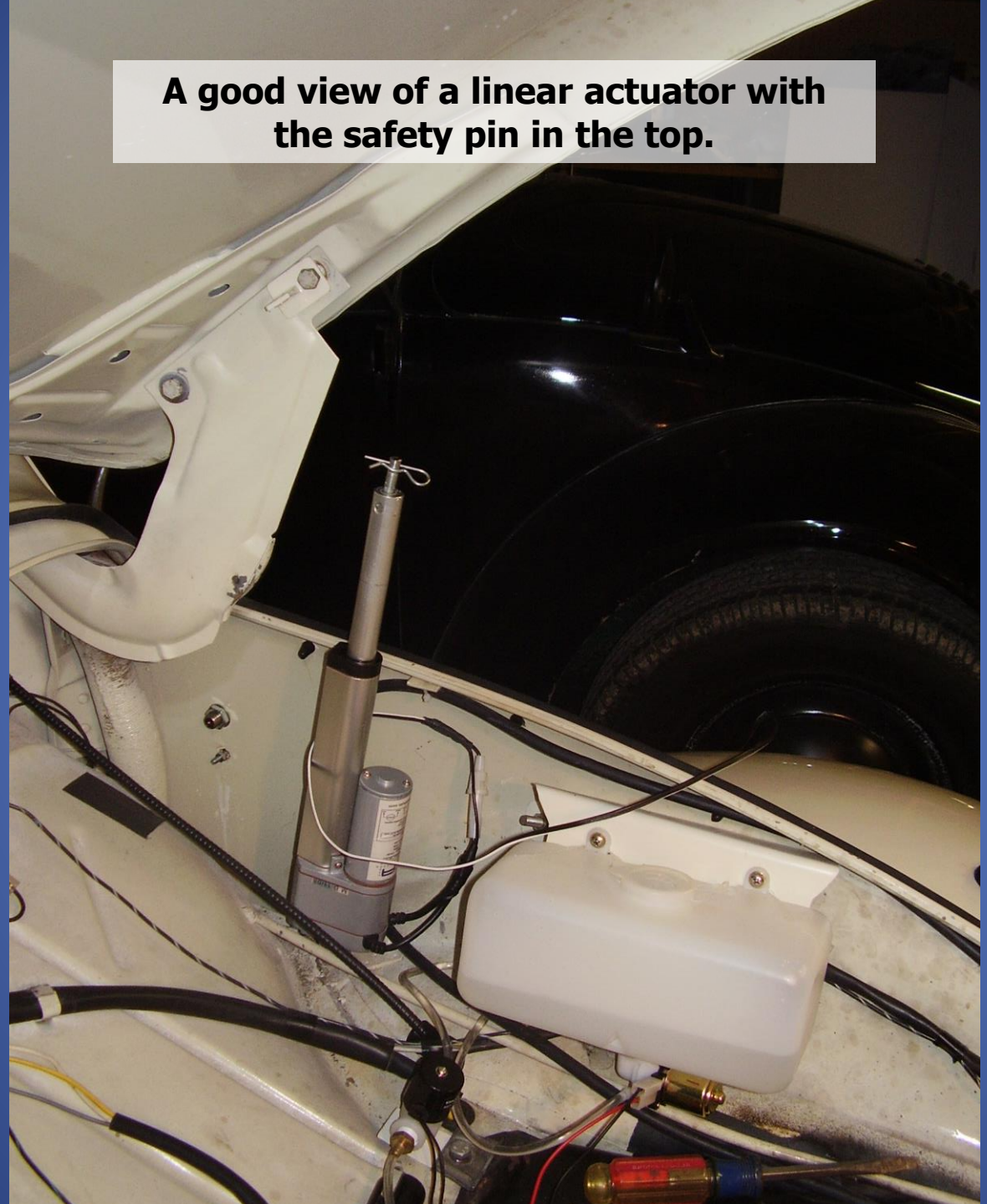

A good view of a linear actuator with the safety pin in the top.

The linear 12 Volt DC actuator with hinge bracket

Another washer bottle used for the rear wheel when you want it to squirt with a second water solenoid that keeps the water from draining from the bottle since the outlet is lower than the bottle itself. This 12 Volt DC solenoid can be energized with the same 30/40 amp relay as the washer bottle.

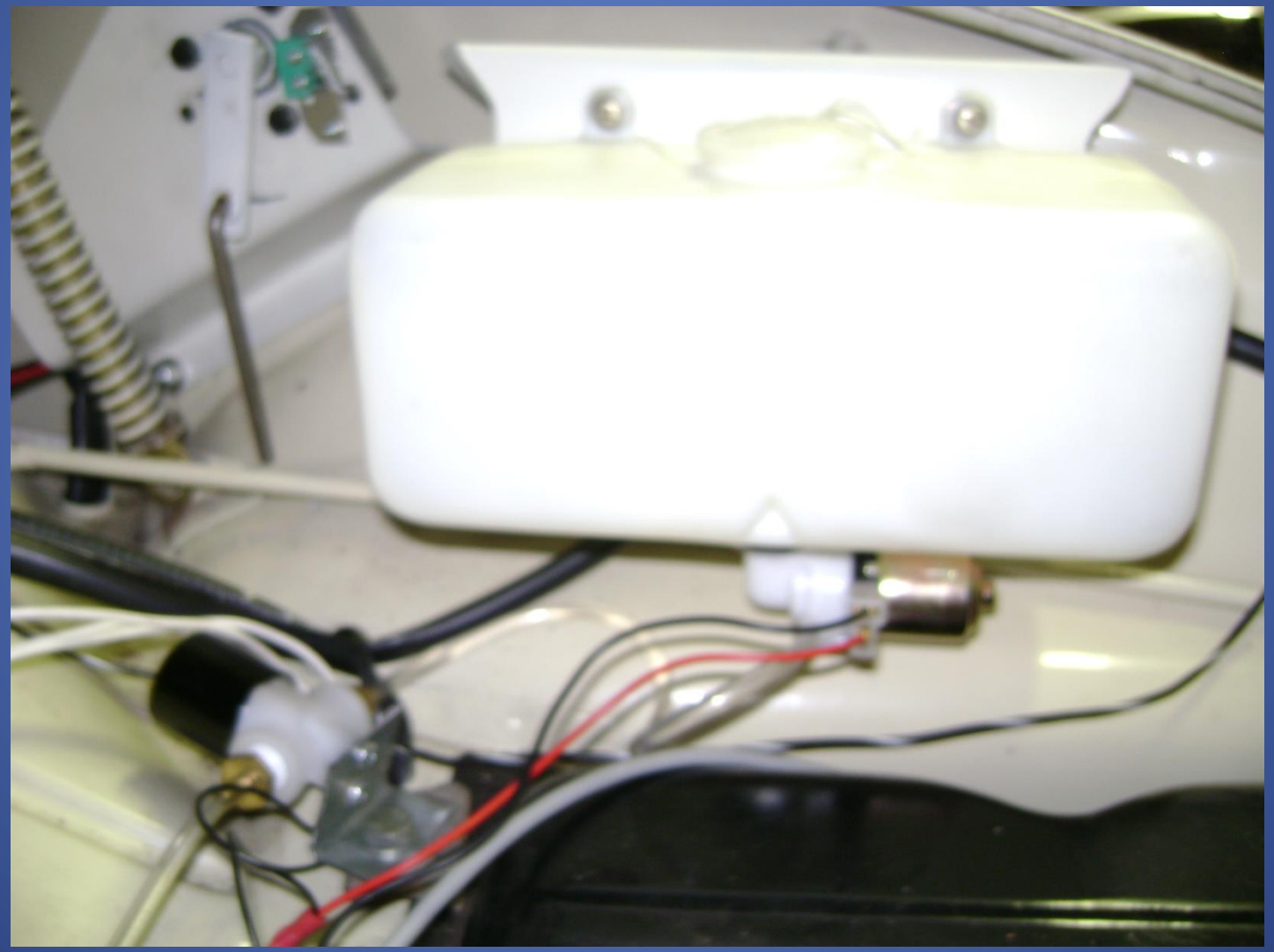

A typical pneumatic set-up with two 4 inch actuators, a 12 Volt DC solenoid and pressure regulator.

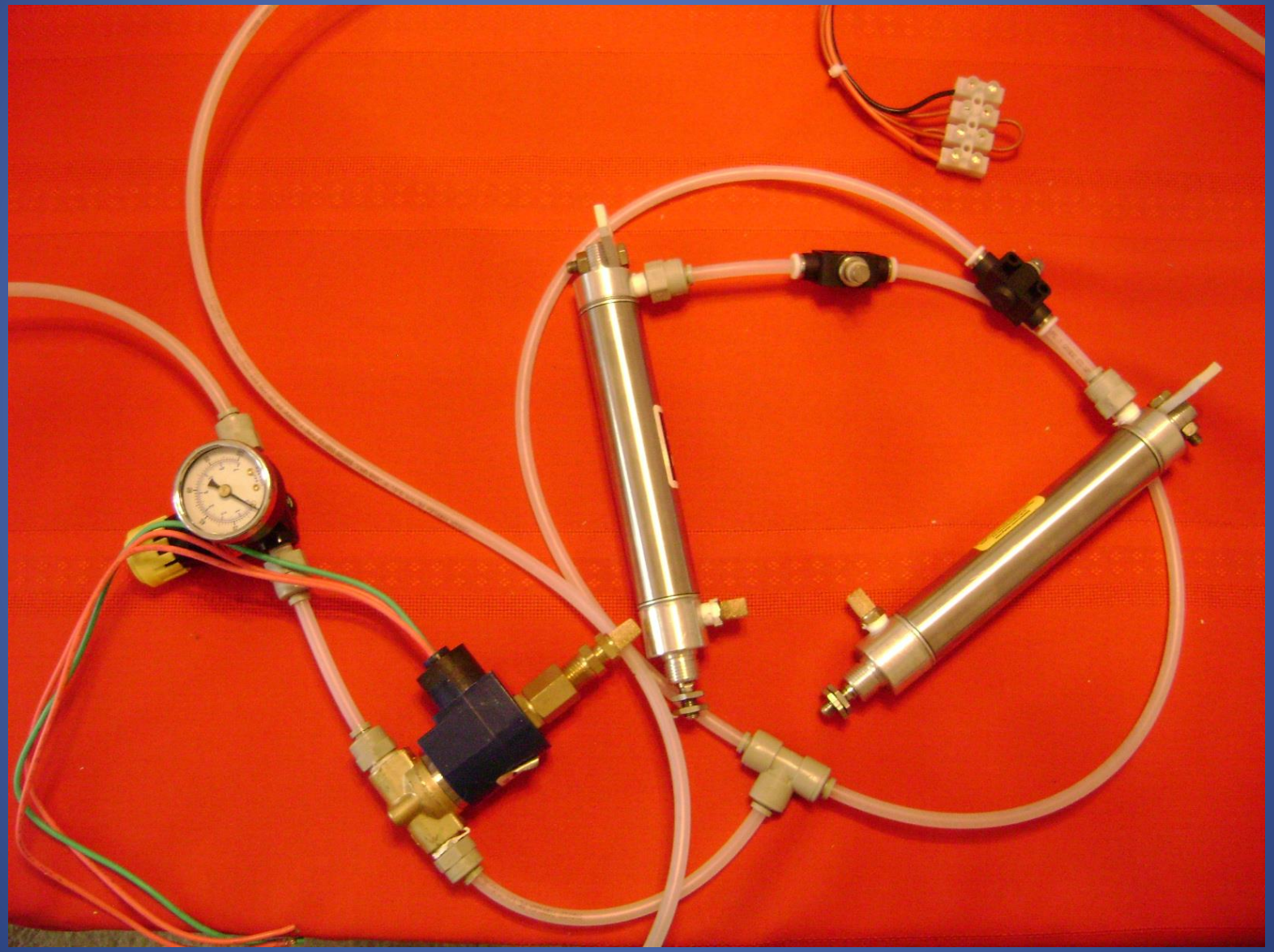

A good picture of the copper oil (water) ejector tube located at the rear wheel at the back of the running board.

Oil ejector tube located in front of rear passenger tire